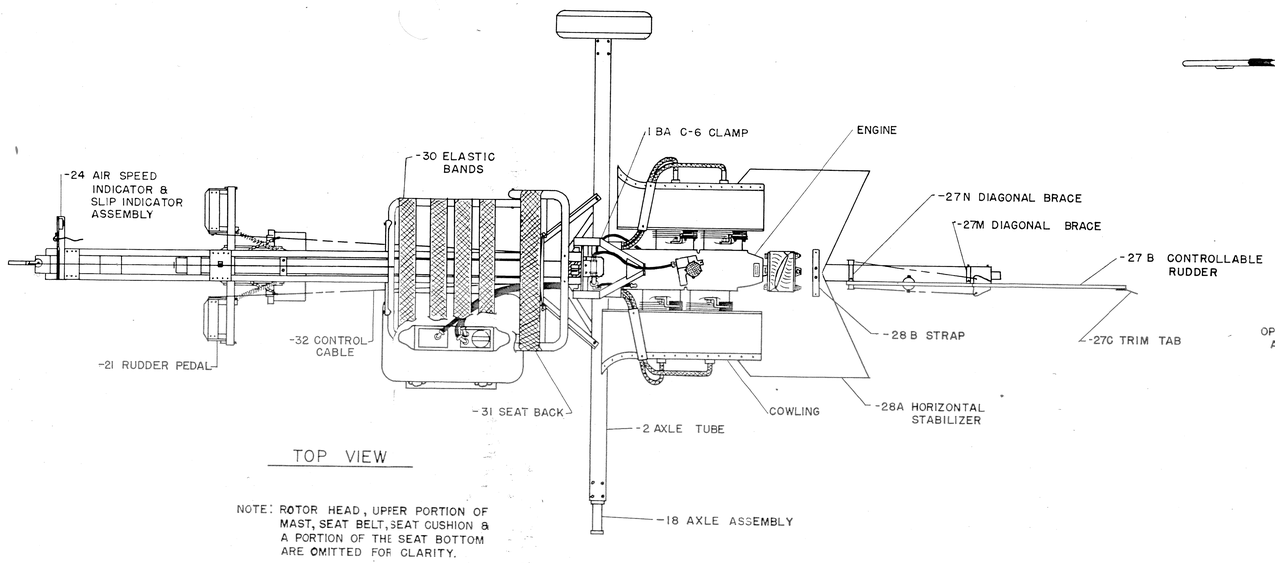

TOP VIEW

NOTE: ROTOR HEAD, UPPER PORTION OF MAST, SEAT BELT, SEAT CUSHION & A PORTION OF THE SEAT BOTTOM ARE OMITTED FOR CLARITY.

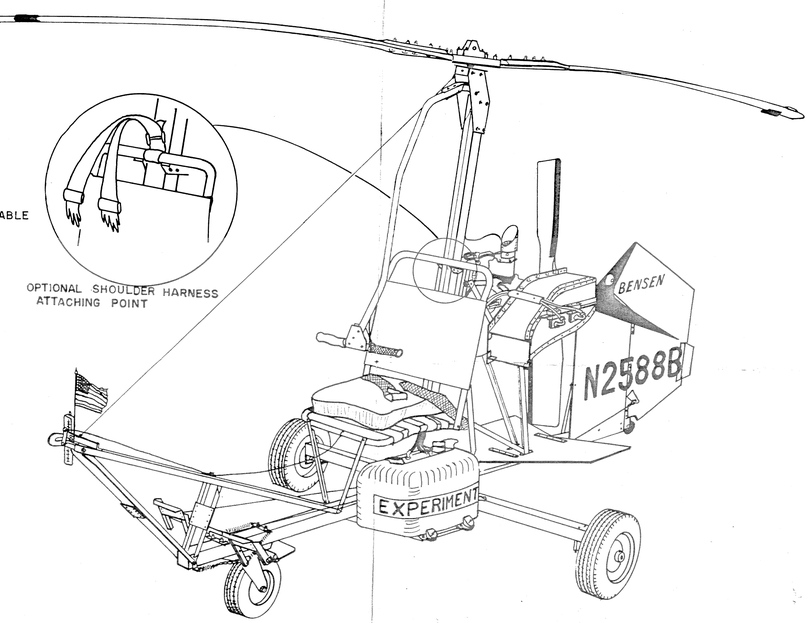

THREE-QUARTER PERSPECTIVE VIEW

NOT TO SCALE

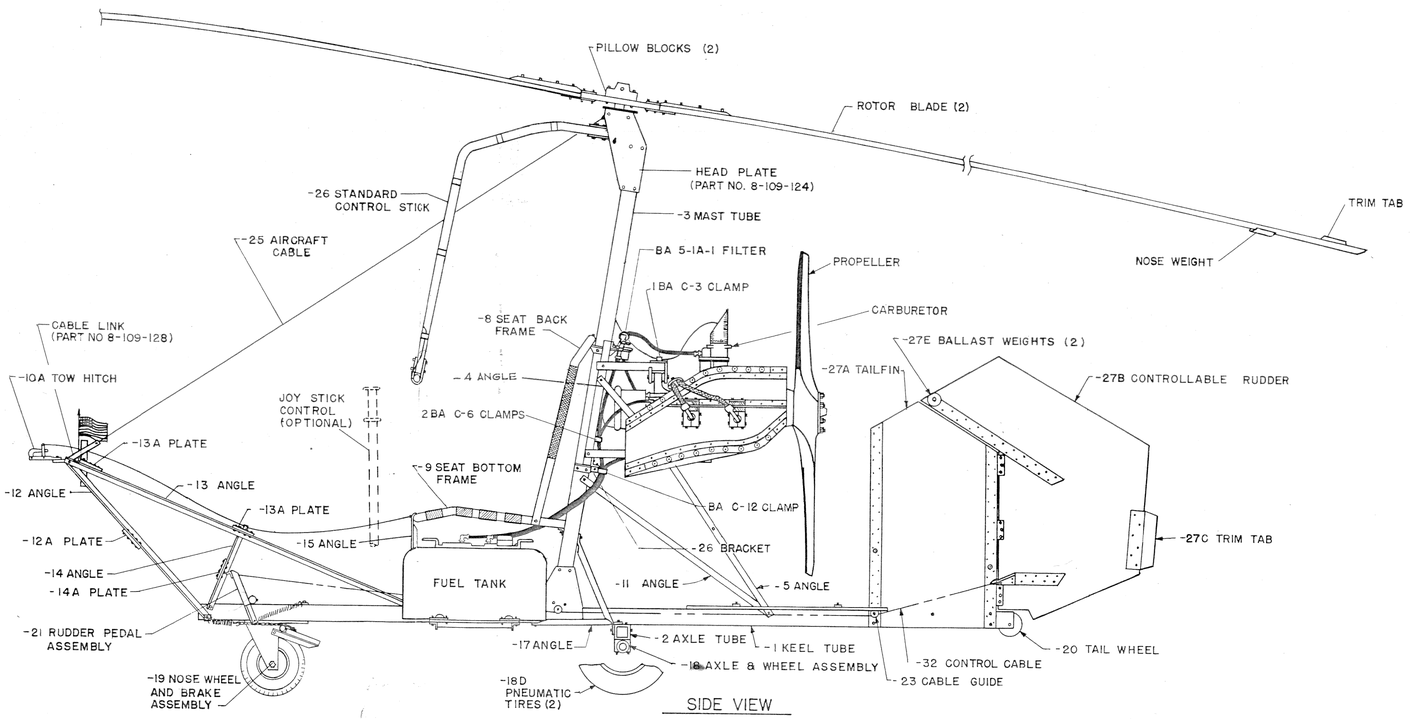

SIDE VIEW

SPECIFICATIONS

LENGTH	135 IN.	NORMAL PAYLOAD	200 LBS.
WIDTH	66 IN.	MAXIMUM PAYLOAD	250 LBS.
HEIGHT	75 IN.	TAKE OFF SPEED	20 MPH
ROTOR DIA.	240 IN.	MAXIMUM SPEED	70 MPH
WEIGHT	247 LBS.		

NOTES

1- DETAIL JOYSTICK CONTROL COLUMN PLANS AND KITS ARE AVAILABLE SEPARATELY FROM THE FACTORY. THEY ARE LISTED IN THE CURRENT PRICE LISTS.

2- CATALOG PART NUMBERS ARE IDENTIFIED BY USING THIS DRAWING NO. AND ENDING IT WITH THE DELETED OF THE PART. EXAMPLE: KEEL TUBE P/N 8-204-101.

3- DO NOT ATTEMPT TO BUILD THE GYRO-COPTER FROM THIS DRAWING ALONE. THIS DRAWING WILL BE USED AS AN ASSEMBLY DRAWING IN CONJUNCTION WITH FULLY DETAILED B-8 CONSTRUCTION PLANS.

4- ONLY FACTORY-SUPPLIED PARTS AND MATERIALS SHALL BE USED IN CONSTRUCTION OF THIS CRAFT. ANY SUBSTITUTION OF MATERIALS WILL AUTOMATICALLY INVALIDATE THE DESIGN AND VOID ALL FACTORY GUARANTEES.

5- CONSTRUCTION KITS MAY BE ORDERED DIRECTLY FROM BENSEN AIRCRAFT CORP., RALEIGH, N.C., USA OR ITS AUTHORIZED DEALERS.

PART NO.	PART NAME	STOCK SIZE	MATERIAL	MATERIAL SPEC
COPYRIGHT 1960 PATENTS PENDING				
TOLERANCE			TOTAL CALC WT.	TOTAL ACT WT.
GYRO-COPTER, BENSEN MODEL B-8			250 LBS.	247 LBS.
LAYOUT	DRAWN	CHECKED	ENG APP.	CUST APP.
Eric E. Smart Sept. 1960	Eric E. Smart Sept. 1960		Jay Bensen Nov. 9, 1960	
BENSEN AIRCRAFT CORP.			SCALE 1" = 8"	

REVISED 4 OCT. 1968 - H.M.S.
REV. MAY 67 - GWK

PRINTED IN U.S.A.