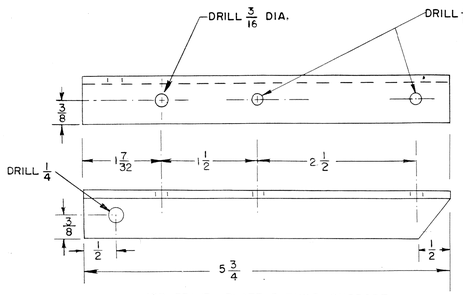

-19B BRAKE PLATE & TUBE SUPPORT
PIVOT ANGLE 2 REQ R. & L.
L.H. SHOWN, R.H. OPPOSITE
(FULL SIZE)

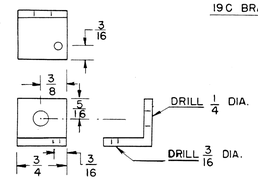

-19E SPRING CLIP
2 REQ. R. & L. (FULL SIZE)

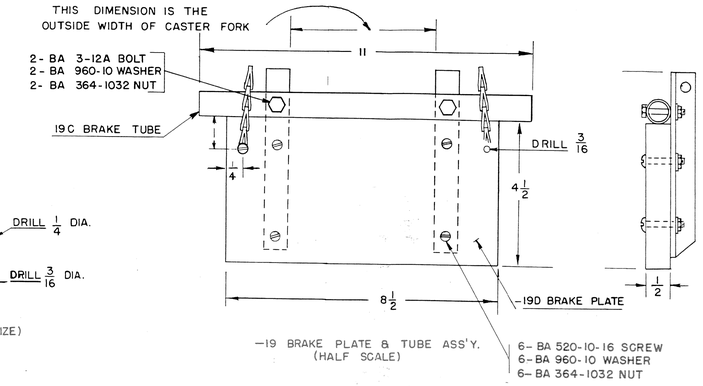

-19 BRAKE PLATE & TUBE ASS'Y.
(HALF SCALE)

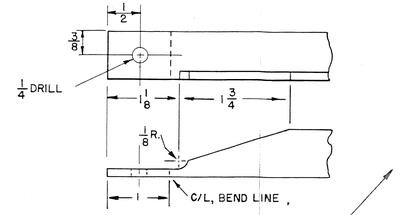

TYPICAL ANGLE END
FULL SCALE
(SEE TABLE FOR LENGTH)

TABLE OF ANGLE LENGTHS	
-11 ANGLE OVERALL LENGTH	27
-17 ANGLE " "	13 3/4
-14 ANGLE " "	10 1/2
-12 ANGLE ℄ DISTANCE BETWEEN HOLES	26
-13 ANGLE " " "	47
(3/16 HOLE LOCATED 23 1/2 ON CENTERS)	

NOTE: -14 ANGLE HAS ONE TYPICAL END AND THE OTHER IS TYPICAL WITH THE EXCEPTION OF A 3/16 HOLE 3/8 FROM THE END, IN PLACE OF A 1/4 HOLE 1/2 FROM END OF ANGLE.
LOWER END OF -13 ANGLE HAS 1 1/8 FLAT IN PLACE OF TYPICAL 1"

NOTE: CARE SHOULD BE TAKEN TO MAKE CERTAIN THAT ALL BENDS START AT LEAST 1/8 FROM THE STRESS RELIEF.

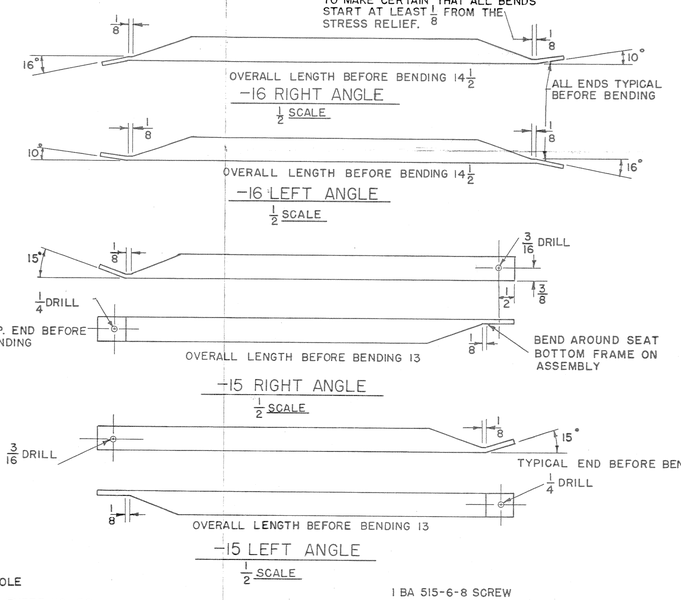

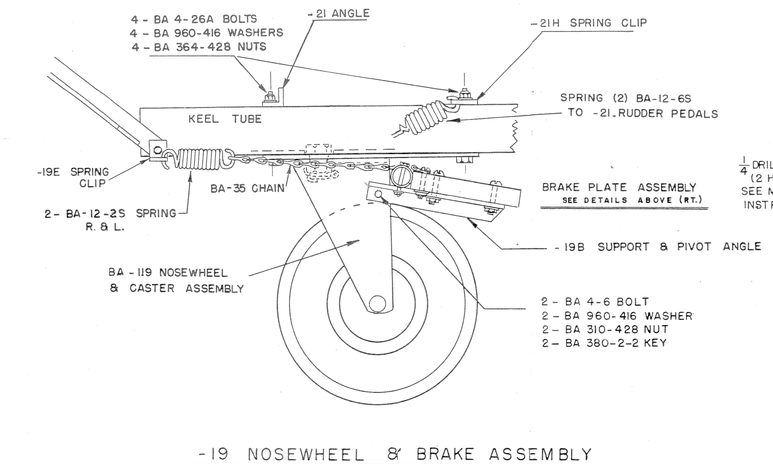

-19 NOSEWHEEL & BRAKE ASSEMBLY
(3/8 SCALE)
REVISED 7-15-64 - E.B.T.

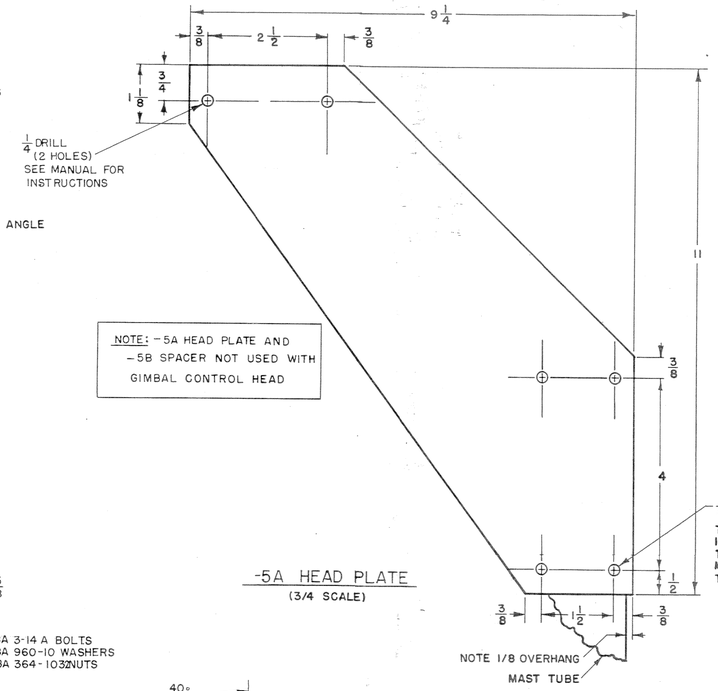

-5A HEAD PLATE
(3/4 SCALE)

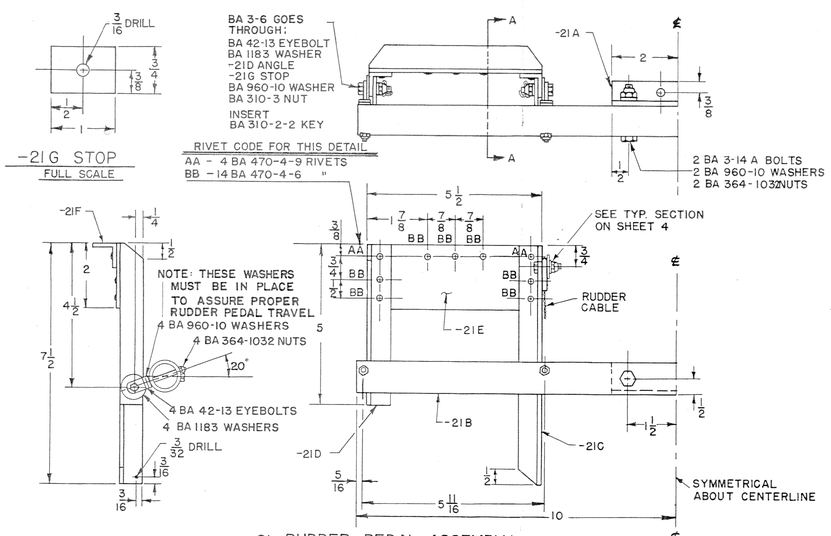

-21 RUDDER PEDAL ASSEMBLY
1/2 SCALE

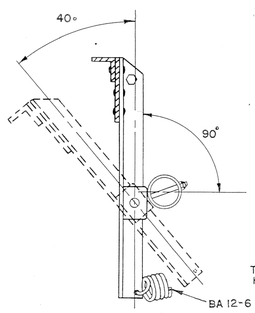

SECTION A-A
(SHOWS STOP CONTACT)
1/2 SCALE

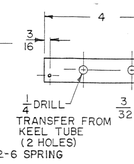

-21H SPRING CLIP
1/2 SCALE

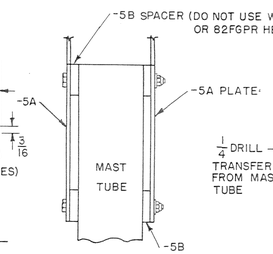

VIEW SHOWING POSITION OF -5B SPACER WHEN -5A HEAD PLATE IS ATTACHED TO -3 MAST TUBE.

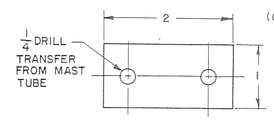

-5B SPACER
(4 REQ'D) FULL SCALE

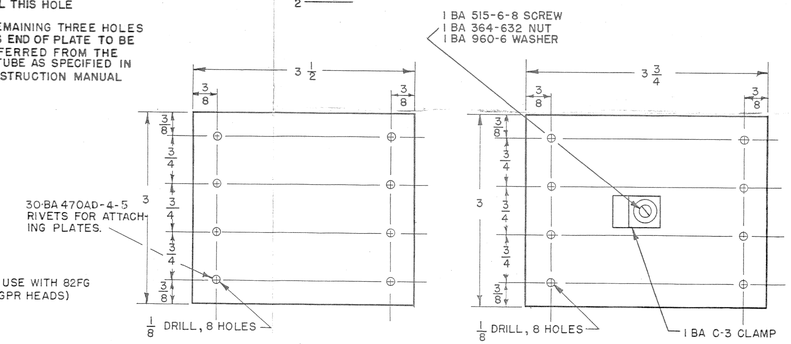

-12A & -14A GUSSET PLATES
FULL SCALE
(ONE EACH REQ'D)

-13A GUSSET PLATE
FULL SCALE
(TWO REQ'D)

REVISED 20 DEC. 1971 EBT
REV. 2 NOV. 1971 EBT
REV. 31 DEC. 1969 LKD
REVISED 2 OCT. 1968 - HMC
REV. 17 JULY 1967 GWK

PART NO.	PART NAME	STOCK SIZE	MATERIAL	MATERIAL SPEC
COPYRIGHT 1960 PATENTS PENDING				
TOLERANCE			TOTAL CALC WT	TOTAL ACT WT.
DETAILS MODEL B-8				
LAYOUT	DRAWN	CHECKED	ENG APP.	CUST APP.
Eric E. Smart June 1960	Eric E. Smart June 1960		8-1-60	
SHEET NO. 3				
SCALE AS SHOWN	REVISED CASTER 7-15-64 EBT			
BENSEN AIRCRAFT CORP.			8-104-100	

PRINTED IN U.S.A.