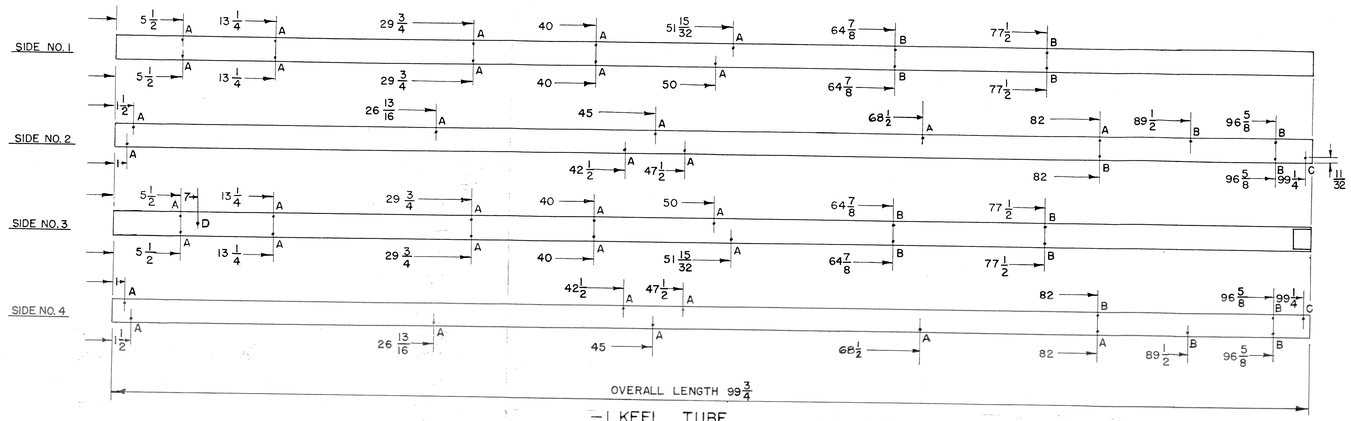

-1 KEEL TUBE

3/16 SCALE

NOTE: ALL DIMENSIONS MEASURED FROM LEFT END

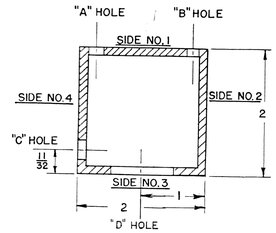

TUBE SECTION FROM LEFT END

NOTE: USE PROVIDED FIXTURE TO LOCATE THE EDGE DISTANCE OF "A" AND "B" HOLES. THIS WILL ASSURE PROPER CLEARANCE BETWEEN BOLT AND INSIDE OF TUBE WHICH IS: NOT LESS THAN .002 IN. AND NOT MORE THAN .015 IN.

HOLE SIZE: "A" HOLES = 1/4 D.
"B" HOLES = 3/16 D.
"C" HOLES = 5/16 D.
"D" HOLE = 1" DIA. ON BOTTOM OF KEEL TUBE ONLY

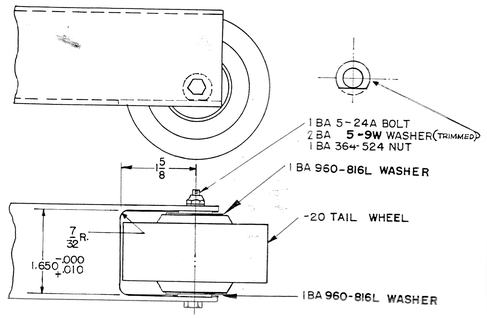

-20 TAIL WHEEL ASSEMBLY

3/4 SCALE

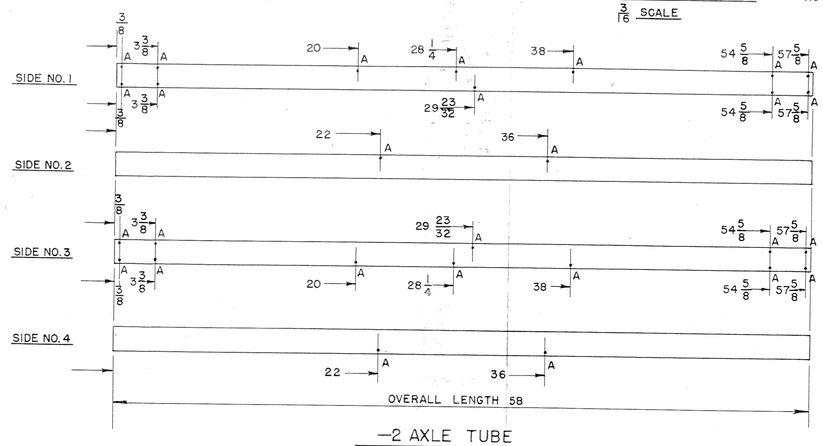

-2 AXLE TUBE

3/16 SCALE

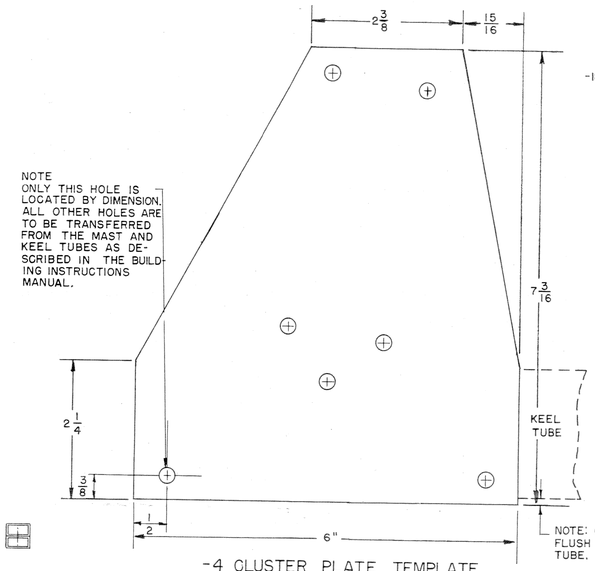

-4 CLUSTER PLATE TEMPLATE

FULL SCALE

(CUT OUT AND USE AS A PATTERN)

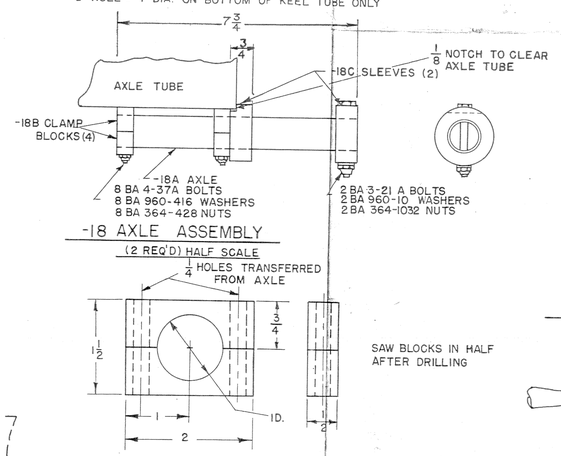

-18 AXLE ASSEMBLY

(2 REQ'D) HALF SCALE

-18B CLAMP BLOCKS

(4 SETS REQ'D) FULL SCALE

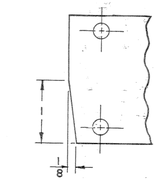

VIEW OF SIDE NO. 2 OF MAST TUBE SHOWING SLOPE CUT

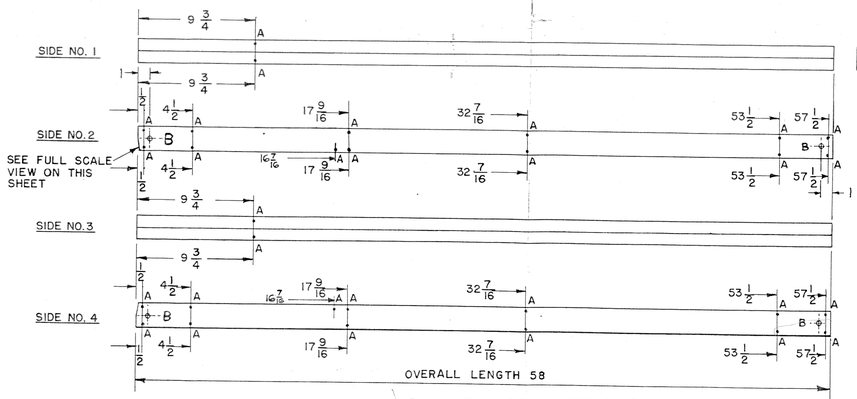

-3 MAST TUBE 2 PCS. 1 X 2

3/16 SCALE

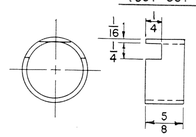

-22B & 23B TUBE SLEEVE

FULL SCALE

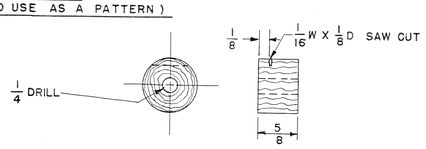

-22A OR -23A WOOD PLUG

FULL SCALE

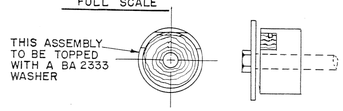

-22 & -23 ASSEMBLY

FULL SCALE

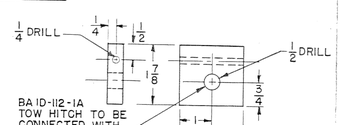

-10B TOW HITCH BLOCK

HALF SCALE

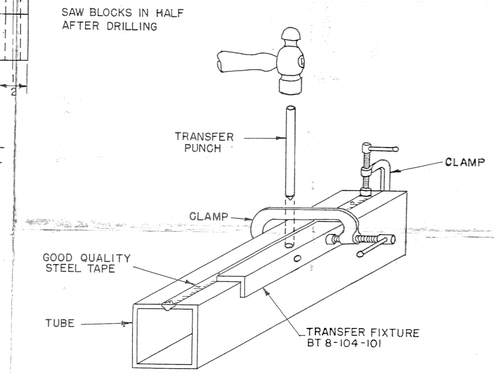

SKETCH SHOWING SET-UP FOR USE OF TRANFER FIXTURE

PART NO.	PART NAME	STOCK SIZE	MATERIAL	MATERIAL SPEC
COPYRIGHT 1960 PATENTS PENDING				
TOLERANCE			TOTAL CALC WT	TOTAL ACT WT
DETAILS MODEL B-8				
LAYOUT	DRAWN	CHECKED	ENG APP	CUST APP
Eric L. Smart Jan. 1960	Eric L. Smart June 1960		Y.B.B. 8-1-60	
BENSEN AIRCRAFT CORP.			SHEET NO 2	
			SCALE AS SHOWN	REV 7-15-64 Ref.
			8-104-100	

REVISED 20 DEC. 1971 EBT
REV. 15 Feb. 1971 Wiley Bi.
REV. 27 MAR. 1970 N.L.W.
REV. 31 DEC. 1969 LWP
REVISED 1 OCTOBER 1968 - HMC
REV. 17 JULY 67 - GWK

PRINTED IN USA